MODEL NUMBERS:
MC24**

NOTE: ADD .25 TO TOP FOR KNIFE EDGE T-MOLD

DIMENSIONAL DRAWING FOR MEETING PLUS TABLES 24"W. CRESENT

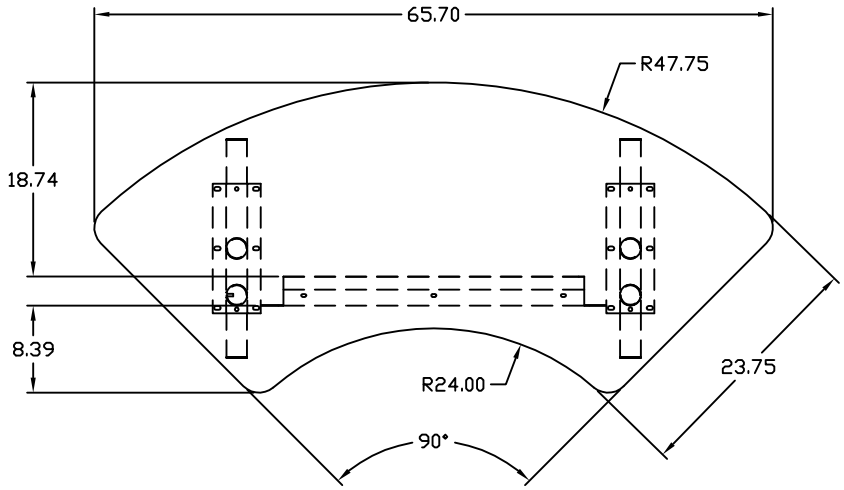

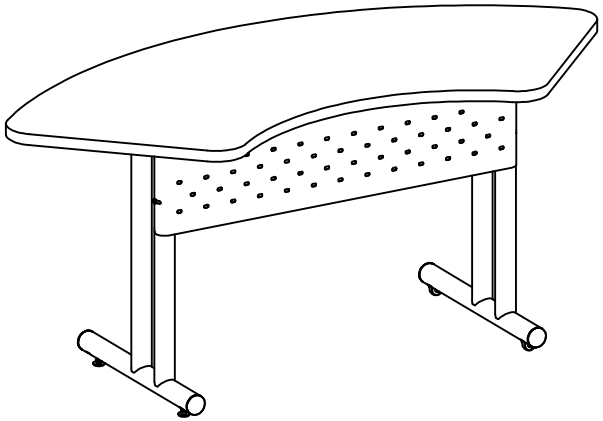

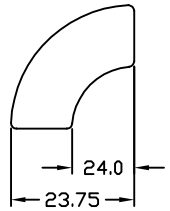

REFERENCE

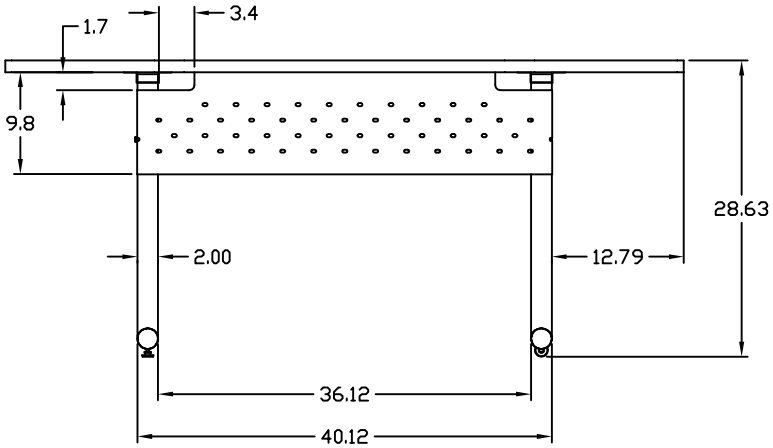

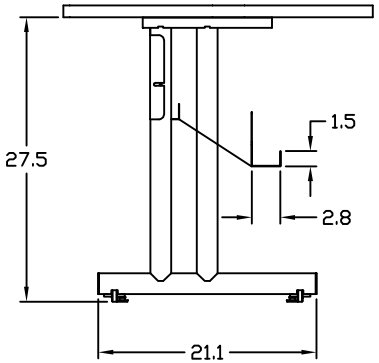

MAYLINE®
BETTER FOR YOUR BUSINESS

Mayline Company, LLC
619 N. Commerce, P.O. Box 728
Sheboygan, WI 53082-0728
Toll Free: 1-800-822-8037
FAX: 920-457-7388
On Line: www.mayline.com