realoffice
by Mayline Group

Aberdeen Series™
Conference Table 72" x 36"
Model No. ACTB6

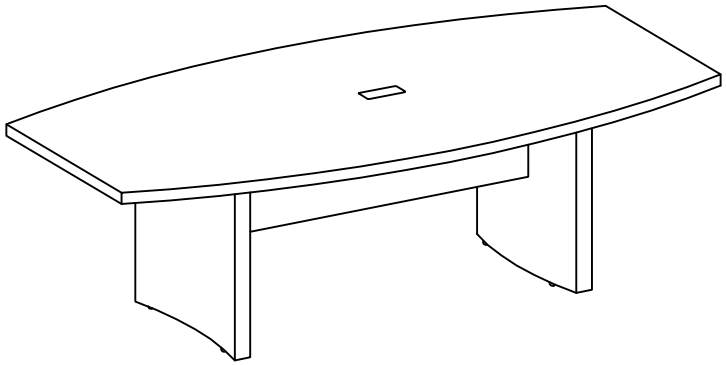

ASSEMBLY INSTRUCTIONS

CALL 1-800-822-8037 FOR ASSISTANCE

P/N **ACTB6** REV 05 02/21/08

PARTS LIST

Name	Part	Qty.	Spare Qty
A	HB 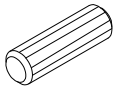 **REALS004** Wood Dowel	**8**	**2**
B	HB 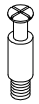 **REALS003** Cam Post	**18**	**2**
C	HB **REALS001** Cam Fastener	**18**	**2**
D	HB **REALS102**** Cam Sticker	**18**	**2**

Name	Part	Qty.	Spare Qty
E	HB 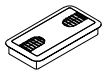 **REALS099** Grommet	**1**	
F	HB 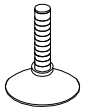 **REALS067** Leveler	**4**	
	ACTBHB		

Items with HB are in hardware box.
**Denotes Color Code

PARTS LIST

Name	Part	Qty.
J*	**ABT6**** Top	**1**
K	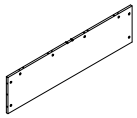 **ACTB6K**** Modesty Panel	**2**

Name	Part	Qty.
L	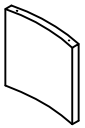 **A6LG**** Table Leg	**2**

***Available in Cherry (LCR) or Mocha (LDC) finish only.**
****Denotes Color Code**

2 Insert Wood Dowels (A) and Cams (C) into Modesty Panels (K). Install Cam Posts (B) into threaded inserts in Table Legs (L). Insert Cams (C) and install Levelers (F) into Table Legs (L). Secure Modesty Panels (K) to Table Legs (L) by turning Cams (C).

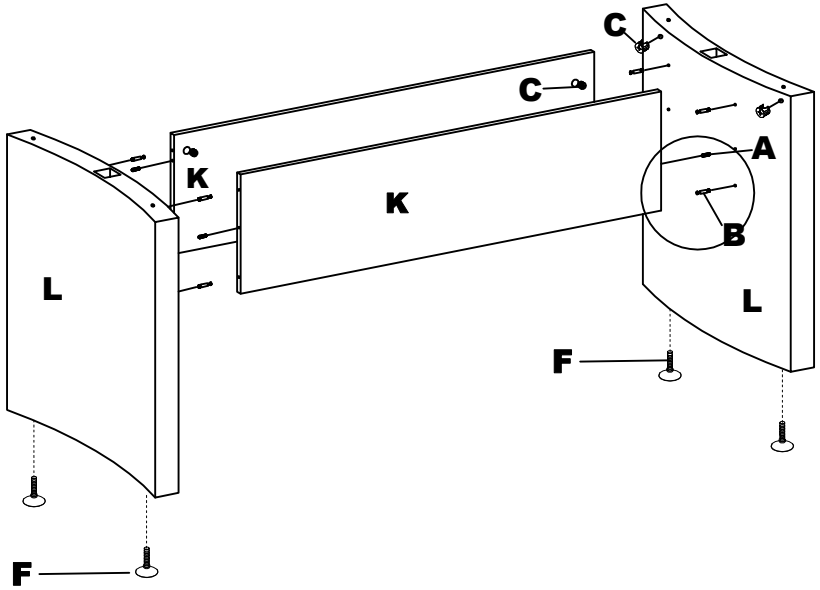

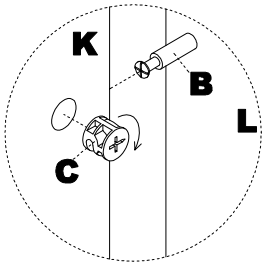

NOTE: The arrow on the face of the Cam (C) should point towards the Cam Post (B) for proper alignment.

3 Insert Wood Dowels (A) into the top of the Table Legs (L) and Modesty Panels (K). Insert Cams into the Modesty Panels (K). Install Cam Posts (B) into threaded inserts in the underside of the Top (J). Secure Top (J) to Modesty Panels (K) by turning Cams (C). Apply Cam Stickers (D) to exposed Cams (C). Install Cap and Grommet (E).

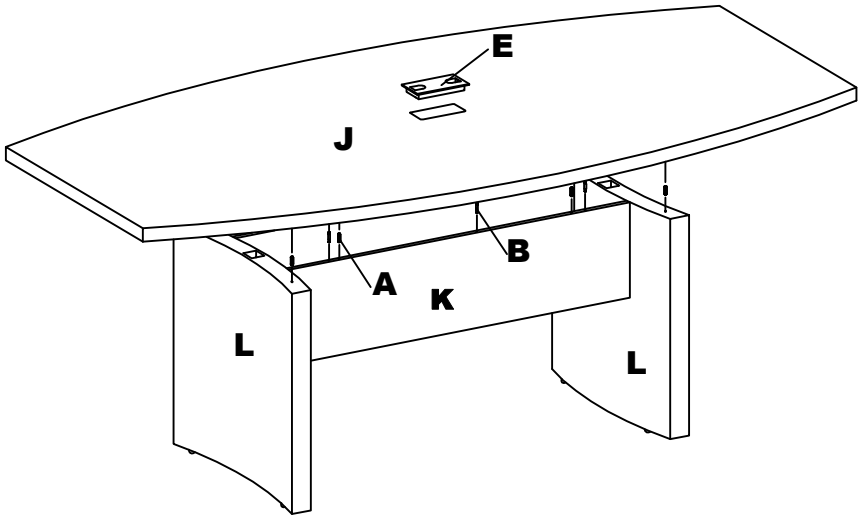

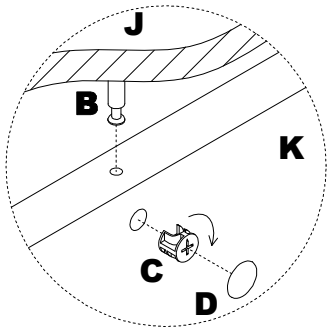

NOTE: The arrow on the face of the Cam (C) should point towards the Cam Post (B) for proper alignment.